Experiment No: 06
Experiment Name: Experiment on Single Side Band (SSB)-Suppressed Carrier Modulation and Demodulation using Hardware.

Objective:

1. To understand how to generate SSB-SC modulation.
2. To observe the changes in SSB-SC signals in different parameters.
3. To observe the signal reconstruction by SSB-SC demodulation.

Circuit Diagram:

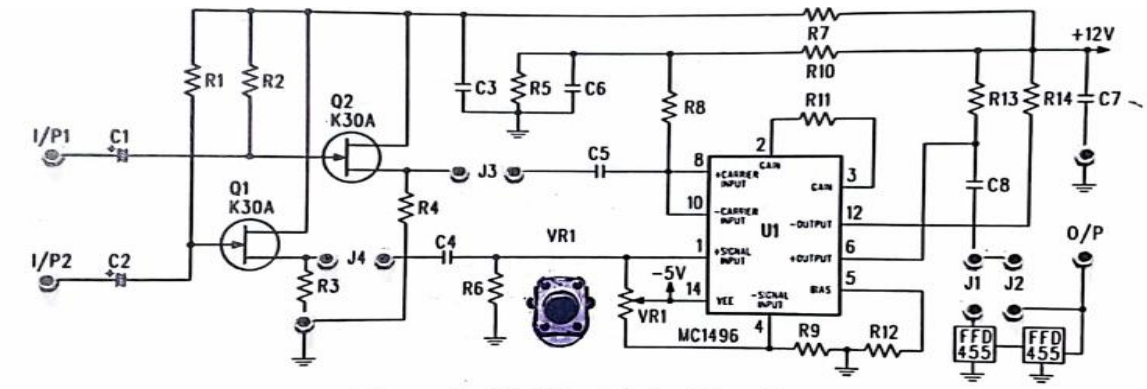

Figure 1. SSB Modulator Circuit.

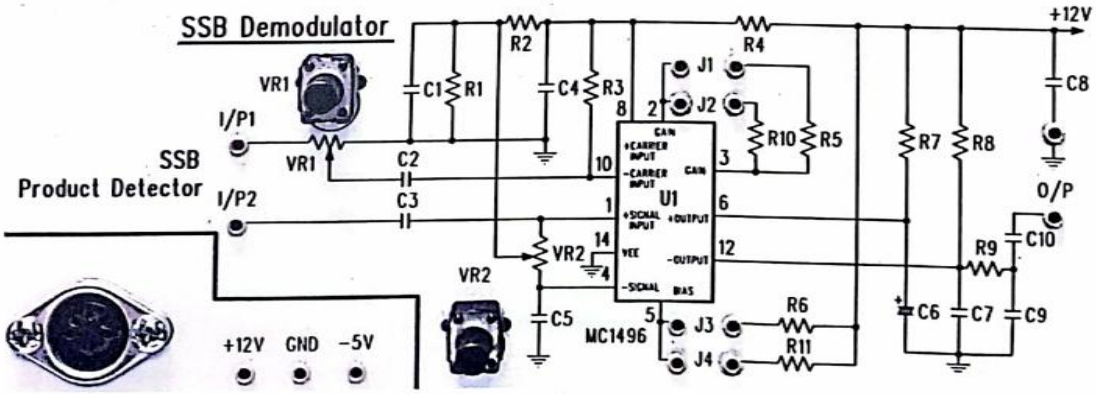

Figure 2. Product Detector SSB Signal.

Modulated & Demodulated Procedure:

1. Locate SSB Modulating circuit on Module KL-93003. Insert the connect plug in J2 to bypass ceramic filters.
2. Check each of the source followers circuits for a proper bias. Set the vertical input of oscilloscope to AC and observe the source output signal and the input signal.
3. Ensure that these two signals are the same but the output amplitude is slightly smaller than the input (1/2). Carefully adjust VR1 to get a minimum output amplitude. Connect it to its input point.
4. VR1 is the audio input/amplifier to ground and connect a 300mVp-p, 455 kHz sine wave to the carrier amplifier input (Module KL-93003). Insert the connect plug at the carrier amplifier. Then remove the connect plug from the audio input and insert it in J1.
5. Using the oscilloscope, measure and record the waveforms listed in Table -1.

6. Connect a 300mVp-p, 2 kHz sine wave to J2 and insert the J1.
7. Using the spectrum analyzer observe and record the output signal spectrum listed in Table
8. Insert connect plug in J2 to bypass ceramic filters. Connect one channel of dual trace oscilloscope to the input (I/P1) and a 300mVp-p, 2 kHz sine wave should be observed at input (I/P2). (Carrier and audio signals should be adjusted alone before connecting to circuits, because if you adjust them during testing, there will be loading errors.)
9. Turn the VR1 to get a DSB-SC modulated output (O/P). Remove the connect plug from J2 and then insert it in J1 and record the result in the table. The output signal will be the SSB modulated signal.
10. Insert connect plug in J2 and then turn the carrier driver circuit to set R11 = 270Ω and R12 = 6.8 kΩ.
11. Connect the carrier signal used in step 2 to the carrier input (I/P1) of product detector, and then observe the SSB modulated output as the demodulated signal.Using the oscilloscope, determine the minimum distortion between output waveform (O/P) and carrier waveform turn the VR1 to get minimum distortion. Record the result in Table-1.
12. Remove the connect plug from J1 and insert it in J2 to bypass the ceramic filters of SSB modulator. Change the carrier to a 700mVp-p, 457 kHz sine wave and then observe the output waveform (O/P), a 2 kHz sine wave. Turn the VR1 to get 100% modulation and then remove the connect plug from J2 and insert it in J1 to record the waveform.
13. Repeat step 6 and record the result in Table-1.
14. Change the connect plug from J3 and then insert it in J4 to change R12 (6.8 kΩ) to R11 (270Ω). Repeat step 6 and record the result in Table-1.
15. Remove the connect plug from J3 and then insert it in J2 to change R12 (6.8 kΩ) to R11 (270 Ω). Repeat step 6 and record the result in Table-1.

Data Table – 1 : (R11 = 270Ω, R12 = 6.8kΩ, Vc = 300mVp-p, Vm = 300mVp-p, fc = 457kHz, fm = 2kHz)

Carrier Waveform

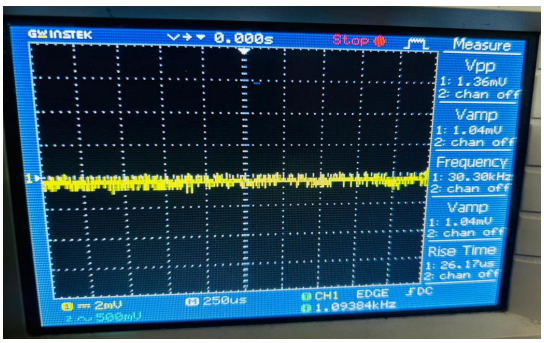

Audio Waveform

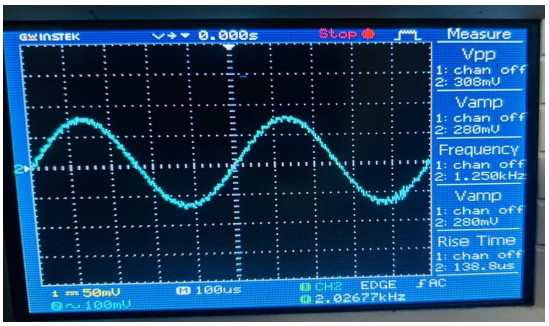

Modulated Output Waveform

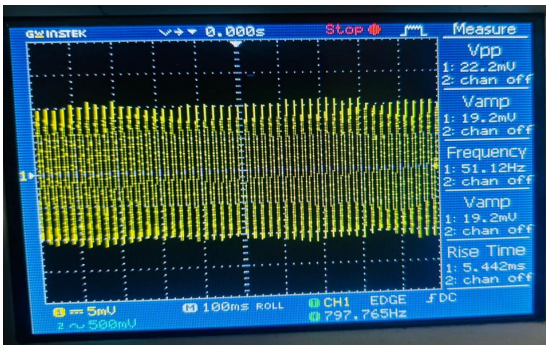

Output Spectrum

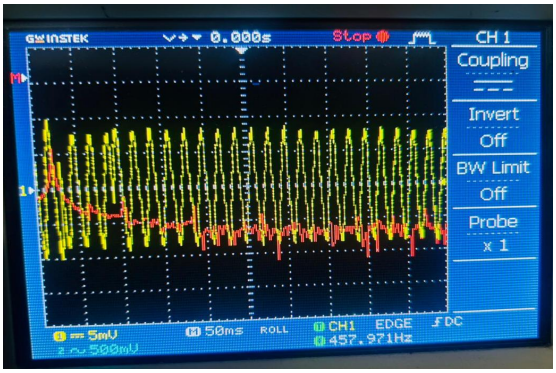

Demodulated Output Waveform

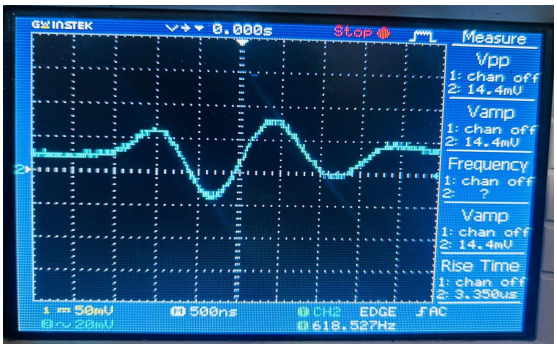

Discussion: In this experiment, we successfully implemented and analyzed Single Side Band Suppressed Carrier (SSB-SC) modulation and demodulation using the KL-93003 hardware module. During the modulation phase, we first verified the biasing of source follower circuits and ensured that the input and output signals were properly aligned. By adjusting VR1, we minimized the output amplitude and achieved a stable modulated signal. The oscilloscope helped us visualize the carrier, audio, and modulated waveforms, while the spectrum analyzer allowed us to observe the frequency components of the SSB signal.In the demodulation phase, we connected the SSB output to the product detector and adjusted the carrier input to retrieve the original audio signal. By fine-tuning VR1 and changing resistor values (R11, R12), we observed how the demodulated output varied with different circuit parameters. The waveform distortion was minimized through careful adjustment, confirming successful signal recovery.Overall, the experiment demonstrated the practical implementation of SSB-SC modulation and demodulation. It highlighted the importance of precise tuning and component configuration in achieving accurate signal transmission and recovery. The results recorded in Data Table – 1 validated the theoretical concepts and provided hands-on experience with communication hardware.